REV.	DESCRIPTION	ECN NO.	NAME	DATE
0	FIRST EDITION	N/A	CLOUD	2013-01-15
1	UPDATE DRAWING	N/A	PY	2020-05-07

RoHS

ALL PARTS MUST MEET TO RoHS REQUIREMENTS

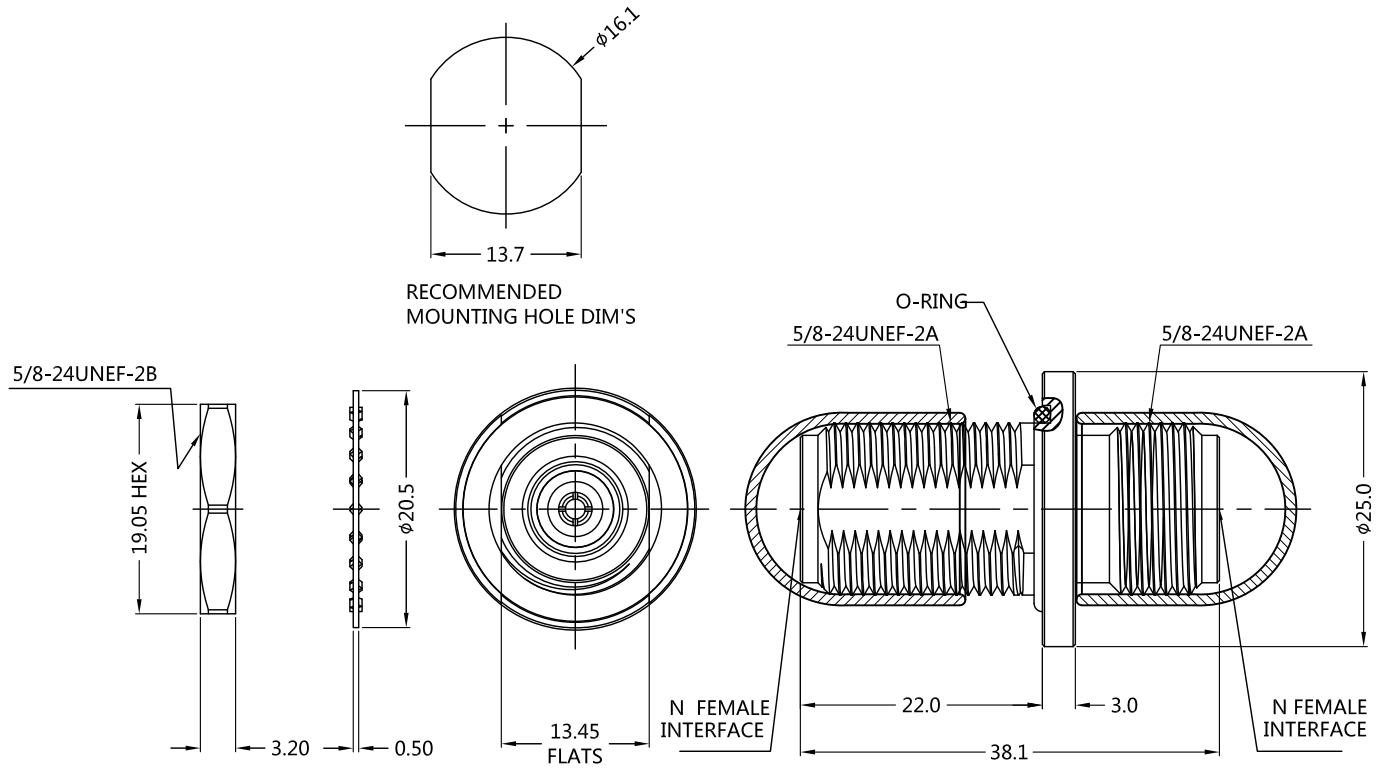

MATERIALS AND PLATING UNIT: MICRO-INCHES

PART NAME	MATERIALS	PLATING
BODY	BRASS C3604	ALBALOY 80u"/COPPER
INSULATOR	TEFLON	N/A
CONTACT PIN	BERYLLIUM COPPER	SILVER 200u"/COPPER
NUT/WASHER	BRASS C3604	ALBALOY 80u"/COPPER
O-RING	SILICON RUBBER	N/A

ELECTRICAL CHARACTERISTICS

IMPEDANCE		50 Ω
VOLTAGE RATING		1000 V(rms)
FREQUENCY RANGE		0 ~ 6 GHz
DIELECTRIC WITHSTANDING VOLTAGE		>2500 V
CONTACT RESISTANCE	CENTER CONTACT	<1.0 mΩ
	OUTER CONTACT	<1.0 mΩ
INSULATION RESISTANCE		>5000 MΩ
INSERTION LOSS		<-0.15 dB
VSWR		<1.2
3RD INTERMODULATION		N/A

MECHANICAL CHARACTERISTICS

FORCE TO ENGAGE AND DISENGAGE	N/A
CENTER CONTACT RETENTION FORCE	> 27 lbs
RECOMMENDED COUPLING TORQUE	1.7 N.m
COUPLING NUT RETENTION FORCE	> 450 N
DURABILITY	>500cycles

ENVIRONMENTAL PARAMETER

TEMPERATURE RANGE	-55 ℃~+155 ℃
THERMAL SHOCK	MIL- STD 202, Meth. 107,Cond. B
VIBRATION	MIL- STD 202, Meth. 204,Cond. B
SHOCK	MIL- STD 202, Meth. 213,Cond. I
CLIMATIC CLASS	IEC 60068 65/165/21

* CUSTOMER OUTLINE DRAWING

UNLESS OTHERWISE SPECIFIED:
1) EDGES : C0.15 MAX ;
2) REMOVE ALL BURRS ;
3) SURFACE ROUGHNESS : Ra1.6 ;
4) UNITS : mm ;
5) DIMENSIONS TOLERANCES
DECIMALS : .x ±0.3 .xx ±0.2 .xxx±0.1;
ANGLES : ± 5°.

THIRD ANGLE PROJECTION

APPROVED :	CUSTOMER P/N : -
CHECKED :	SCALE : 1 : 1
DRAWING : PY	DATE : 2020-05-07
	PAGE : 1/1

SLK SUPERLINK

TITLE : N FEMALE BULKHEAD-N FEMALE STARIGHT ADAPTOR -50 OHM

DRAWING NO. : 5NCF06S-NCF-010

COMPANY WEBSITE : www.slkcorp.com