REV.	DESCRIPTION	ECN NO.	NAME	DATE
0	FIRST EDITION	N/A	FANG	2018-10-30
1	NEW FRAME	N/A	Liu	2020-09-27

RoHS

ALL PARTS MUST MEET TO RoHS REQUIREMENTS

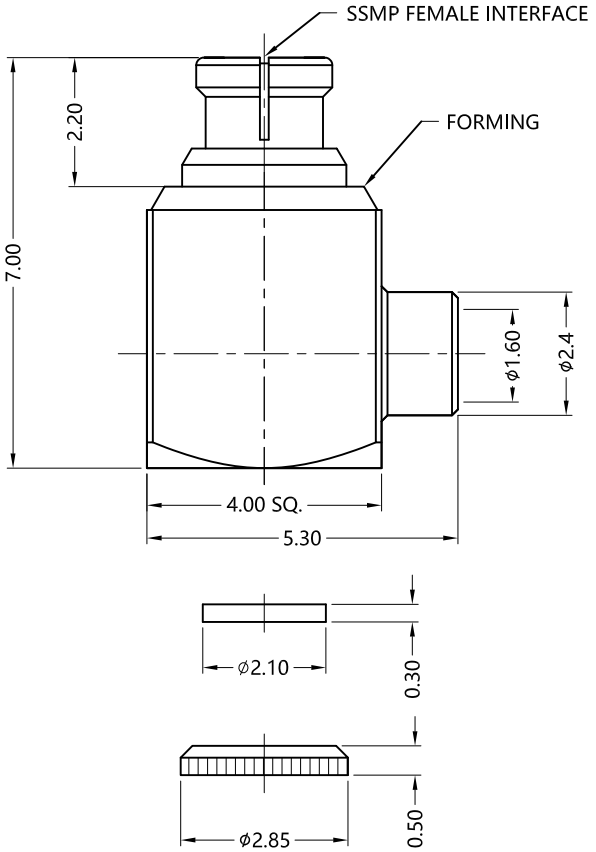

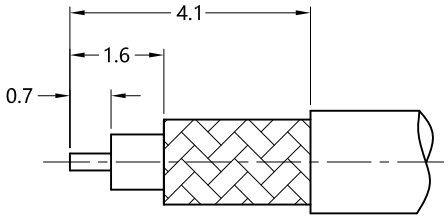

RECOMMENDED CABLE STRIPPING DIM'S

MATERIALS AND PLATING UNIT: MICRO-INCHES		
PART NAME	MATERIALS	PLATING
BODY	BRASS	GOLD 3 u"/NICKEL/COPPER
INSULATOR	PTFE ASTM-D-1710	N/A
CONTACT PIN	Be-Cu C17300	GOLD 30 u"/NICKEL/COPPER
OUT CONTACT	Be-Cu C17300	GOLD 3 u"/NICKEL/COPPER

ELECTRICAL CHARACTERISTICS		
IMPEDANCE		50 Ω
VOLTAGE RATING		335 V(rms)
FREQUENCY RANGE		0 ~ 6 GHz
DIELECTRIC WITHSTANDING VOLTAGE		>500 V
CONTACT RESISTANCE	CENTER CONTACT	<6.0 mΩ
	OUTER CONTACT	<2.0 mΩ
INSULATION RESISTANCE		>1000 MΩ
INSERTION LOSS		N/A
VSWR		<1.3
3RD INTERMODULATION		N/A

MECHANICAL CHARACTERISTICS		
CENTER CONTACT RETENTION FORCE		>1.5 lbs
Engagement force	Full detent	<4.5 lbs
	Smooth bore	<2.5 lbs
Disengagement force	Full detent	<6.5 lbs
	Smooth bore	<1.5 lbs
DURABILITY	Full detent	>100 cycles
	Smooth bore	>500 cycles

ENVIRONMENTAL PARAMETER	
TEMPERATURE RANGE	-40 ℃~+125 ℃

* CUSTOMER OUTLINE DRAWING

UNLESS OTHERWISE SPECIFIED:
1) EDGES : C0.15 MAX ;
2) REMOVE ALL BURRS ;
3) SURFACE ROUGHNESS : Ra1.6 ;
4) UNITS : mm ;
5) DIMENSIONS TOLERANCES
DECIMALS : .x ±0.3 .xx ±0.2 .xxx±0.1;
ANGLES : ± 5°.

THIRD ANGLE PROJECTION

APPROVED :	CUSTOMER P/N : -
CHECKED :	SCALE : 8: 1
DRAWING :	DATE : 2020-09-27
	PAGE : 1/1

SLK SUPERLINK

TITLE : SSMP FEMALE R/A SOLDER FOR TFLEX-047 CABLE,50Ω

DRAWING NO. : 5MPF15R-S04-002

COMPANY WEBSITE : www.slkcorp.com