| REV. | DESCRIPTION | ECN NO. | NAME | DATE |
|---|---|---|---|---|
| 0 | FIRST EDITION | N/A | ZLX | 2018-04-27 |
| 1 | UP THE DRAWING | N/A | WANG | 2018-05-25 |
| 2 | UPDATE DRAWING | N/A | QGZ | 2020-06-29 |

RoHS

ALL PARTS MUST MEET TO RoHS REQUIREMENTS

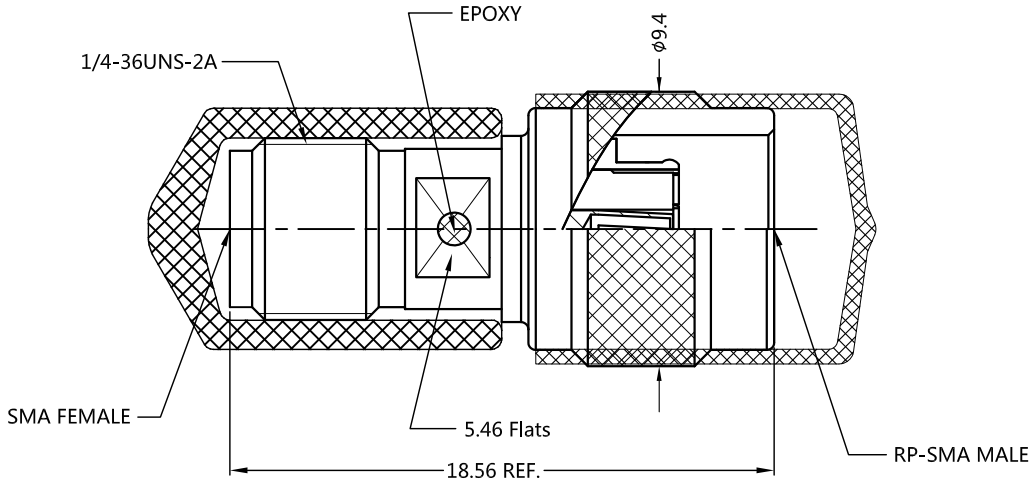


| MATERIALS AND PLATING UNIT: MICRO-INCHES | | |
|---|---|---|
| PART NAME | MATERIALS | PLATING |
| BODY | STAINLESS STEEL 303 | PASSIVATION |
| CONTACT PIN | Be-Cu C17300 | GOLD 30u"/NICKEL/COPPER |
| INSULATOR | PTFE ASTM-D-1710 | N/A |
| OUTER CONTACT | Be-Cu C17300 | GOLD 30u"/NICKEL/COPPER |

| ELECTRICAL CHARACTERISTICS | | |
|---|---|---|
| IMPEDANCE | | 50 Ω |
| VOLTAGE RATING | | 500 V(rms) |
| FREQUENCY RANGE | | 0 ~ 18 GHz |
| DIELECTRIC WITHSTANDING VOLTAGE | | >500 V |
| CONTACT RESISTANCE | CENTER CONTACT | <3.0 mΩ |
| | OUTER CONTACT | <2.0 mΩ |
| INSULATION RESISTANCE | | >5000 MΩ |
| INSERTION LOSS | | $< 0.1x\sqrt{F(GHz)}$ dB |
| VSWR | | 1.10@0~3GHz<br>1.20@3~6GHz |
| 3RD INTERMODULATION | | N/A |

| MECHANICAL CHARACTERISTICS | |
|---|---|
| FORCE TO ENGAGE AND DISENGAGE | N/A |
| CENTER CONTACT RETENTION FORCE | >6 lbs |
| RECOMMENDED COUPLING TORQUE | 7-10 in-lbs |
| COUPLING NUT RETENTION FORCE | >60 lbs |
| DURABILITY | >500cycles |

| ENVIRONMENTAL PARAMETER | |
|---|---|
| TEMPERATURE RANGE | -40 ℃~+125 ℃ |

## * CUSTOMER OUTLINE DRAWING

UNLESS OTHERWISE SPECIFIED:
1) EDGES : C0.15 MAX ;
2) REMOVE ALL BURRS ;
3) SURFACE ROUGHNESS : Ra1.6 ;
4) UNITS : mm ;
5) DIMENSIONS TOLERANCES
DECIMALS : .x ±0.3 .xx ±0.2 .xxx±0.1;
ANGLES : ± 5°.

THIRD ANGLE PROJECTION

| | |
|---|---|
| APPROVED : | CUSTOMER P/N : - |
| CHECKED : | SCALE : 1 : 1 |
| DRAWING : | DATE : 2020-06-29 |
| | PAGE : 1/1 |

SUPERLINK

TITLE : RP-SMA MALE TO SMA FEMALE S/T, 50Ω

DRAWING NO. : 5MAF06S-RMAM-001

COMPANY WEBSITE : www.slkcorp.com