REV.	DESCRIPTION	ECN NO.	NAME	DATE
1	NEW FRAME	N/A	JING	2020-06-22

ALL PARTS MUST MEET TO RoHS REQUIREMENTS

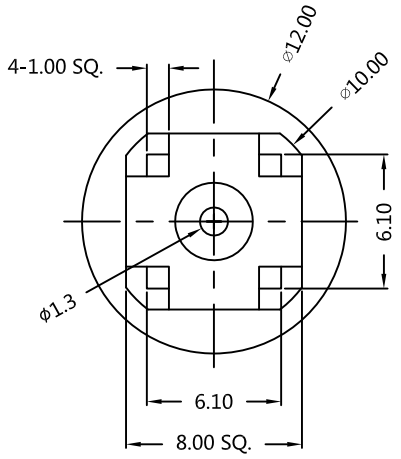

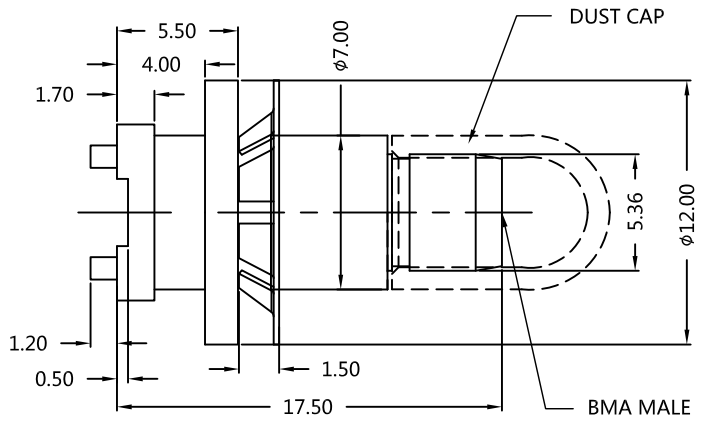

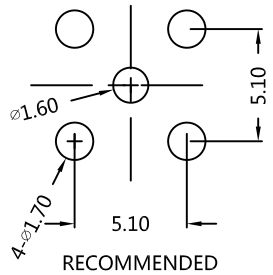

RECOMMENDED MOUNTING HOLES

MATERIALS AND PLATING UNIT: MICRO-INCHES

PART NAME	MATERIALS	PLATING
BODY	BRASS	GOLD 20u"/NICKEL/COPPER
INSULATOR	TEFLON MIL-P-19468	N/A
CONTACT PIN	BRASS	GOLD 30u"/NICKEL/COPPER
WASHER	Be-Cu C17300	GOLD 20u"/NICKEL/COPPER

ELECTRICAL CHARACTERISTICS

IMPEDANCE		50 Ω
VOLTAGE RATING		350 V(rms)
FREQUENCY RANGE		DC ~ 3 GHz
DIELECTRIC WITHSTANDING VOLTAGE		>1000 V
CONTACT RESISTANCE	CENTER CONTACT	<3.0 mΩ
	OUTER CONTACT	<2.0 mΩ
INSULATION RESISTANCE		>5000 MΩ
INSERTION LOSS		N/A
RF-LEAKAGE		N/A
VSWR		<1.25
3RD INTERMODULATION		N/A

MECHANICAL CHARACTERISTICS

FORCE TO ENGAGE	<13.5 N
FORCE TO DISENGAGE	>2 N
RECOMMENDED COUPLING TORQUE	>6 lbs
COUPLING NUT RETENTION FORCE	N/A
DURABILITY	>500 cycles

ENVIRONMENTAL PARAMETER

TEMPERATURE RANGE	-65 ℃~+125 ℃

* CUSTOMER OUTLINE DRAWING

UNLESS OTHERWISE SPECIFIED:
1) EDGES : C0.15 MAX ;
2) REMOVE ALL BURRS ;
3) SURFACE ROUGHNESS : Ra1.6 ;
4) UNITS : mm ;
5) DIMENSIONS TOLERANCES
DECIMALS : .x ±0.3 .xx ±0.2 .xxx±0.1;
ANGLES : ± 5°.

THIRD ANGLE PROJECTION

APPROVED :	CUSTOMER P/N : -
CHECKED :	SCALE : 3 : 1
DRAWING : JING	DATE : 2020-06-22
	PAGE : 1/1

SLK SUPERLINK

TITLE : BMA MALE STR FOR PCB

DRAWING NO. : 5BMM25S-P41-006

COMPANY WEBSITE : www.slkcorp.com