REV.	DESCRIPTION	ECN NO.	NAME	DATE
1	NEW FRAME	N/A	JING	2020-06-04

ALL PARTS MUST MEET TO RoHS REQUIREMENTS

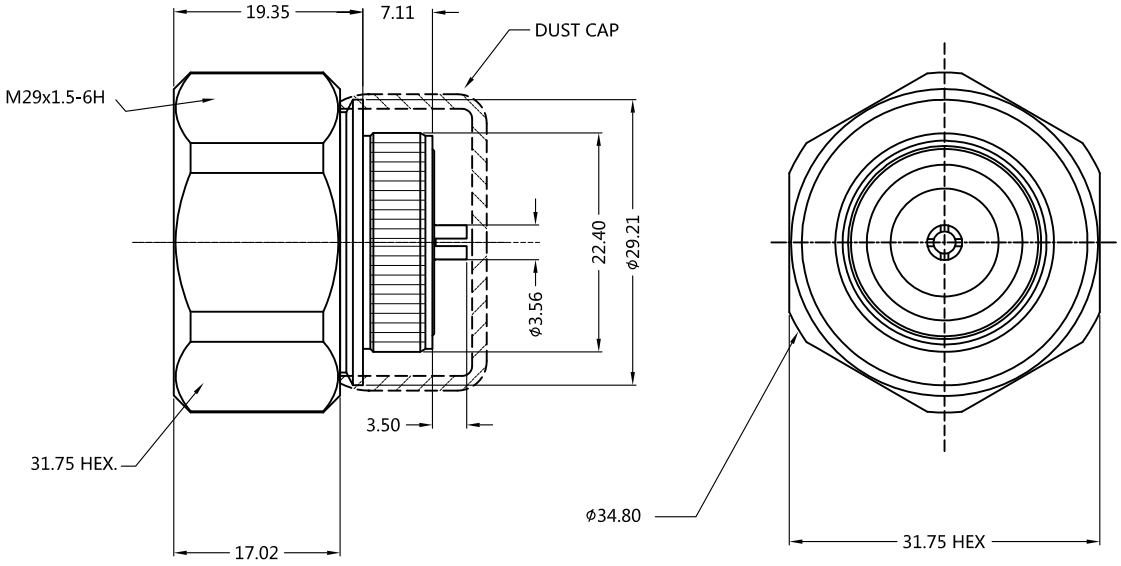

MATERIALS AND PLATING UNIT: MICRO-INCHES

PART NAME	MATERIALS	PLATING
BODY	BRASS	ALBALOY 120u"/COPPER
INSULATOR	PTFE	N/A
CONTACT PIN	BRASS	ALBALOY 120u"/COPPER
SHELL	BRASS	ALBALOY 120u"/COPPER

ELECTRICAL CHARACTERISTICS

IMPEDANCE		50 Ω
VOLTAGE RATING		1000 V(rms)
FREQUENCY RANGE		0 ~ 2.5 GHz
DIELECTRIC WITHSTANDING VOLTAGE		>3000 V
CONTACT RESISTANCE	CENTER CONTACT	<1.5 mΩ
	OUTER CONTACT	<0.4 mΩ
INSULATION RESISTANCE		>10000 MΩ
INSERTION LOSS		$<0.1x\sqrt{f(GHz)}$
RF-LEAKAGE		N/A
VSWR		<1.30
3RD INTERMODULATION		<-165 dBc

MECHANICAL CHARACTERISTICS

FORCE TO ENGAGE AND DISENGAGE	N/A
CENTER CONTACT RETENTION FORCE	>45 lbs
RECOMMENDED COUPLING TORQUE	>310 in-lbs
COUPLING NUT RETENTION FORCE	>225 lbs
DURABILITY	>500 cycles

ENVIRONMENTAL PARAMETER

TEMPERATURE RANGE	-40 ℃~+85 ℃
THERMAL SHOCK	MIL- STD 202, Meth. 107,Cond. B
VIBRATION	MIL- STD 202, Meth. 204,Cond. A
SHOCK	MIL- STD 202, Meth. 213,Cond.A

* CUSTOMER OUTLINE DRAWING

UNLESS OTHERWISE SPECIFIED:
1) EDGES : C0.15 MAX ;
2) REMOVE ALL BURRS ;
3) SURFACE ROUGHNESS : Ra1.6 ;
4) UNITS : mm ;
5) DIMENSIONS TOLERANCES
DECIMALS : .x ±0.3 .xx ±0.2 .xxx±0.1;
ANGLES : ± 5°.

THIRD ANGLE PROJECTION

APPROVED :	CUSTOMER P/N : -
CHECKED :	SCALE : 4 : 3
DRAWING : JING	DATE : 2020-06-04
	PAGE : 1/1

SLK SUPERLINK

TITLE : 7/16 S/T MALE CONNECTOR

DRAWING NO. : 5A7M25S-P01-004

COMPANY WEBSITE : www.slkcorp.com