REV.	DESCRIPTION	ECN NO.	NAME	DATE
A1	ADD DIMENSIONS	N/A	LIHEMIN	2017-09-28
A2	NEW FRAME	N/A	JING	2020-05-26

RoHS

ALL PARTS MUST MEET TO RoHS REQUIREMENTS

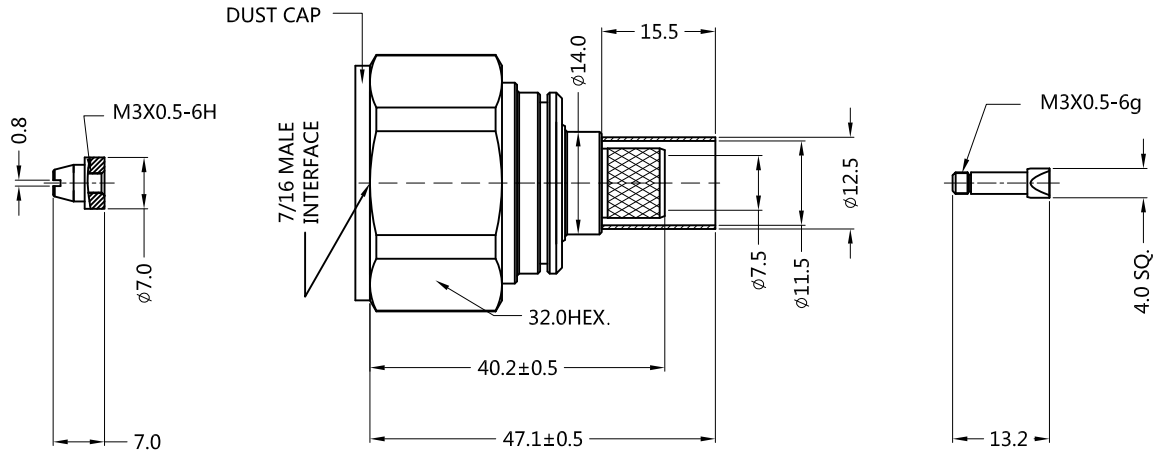

MATERIALS AND PLATING UNIT: MICRO-INCHES

PART NAME	MATERIALS	PLATING
BODY	BRASS C3604	ALBALOY 80u"/COPPER
INSULATOR	PTFE	N/A
CONTACT PIN-1	BRASS	SILVER 40u"/COPPER
CONTACT PIN-2	BRASS	SILVER 40u"/COPPER
OUT CONTACT	BRASS	SILVER 40u"/COPPER
DUST CAP	PE	N/A

ELECTRICAL CHARACTERISTICS

IMPEDANCE		50 Ω
VOLTAGE RATING		1000 V(rms)
FREQUENCY RANGE		0～5 GHz
DIELECTRIC WITHSTANDING VOLTAGE		>2500 V
CONTACT RESISTANCE	CENTER CONTACT	<1.5 mΩ
	OUTER CONTACT	<0.4mΩ
INSULATION RESISTANCE		>10000 MΩ
INSERTION LOSS		<>110 dB@1GHz
RF-LEAKAGE		N/A
VSWR		<1.05@0~1 GHz <1.09@0~2.5GHz <1.12@0~5GHz
3RD INTERMODULATION		N/A

MECHANICAL CHARACTERISTICS

FORCE TO ENGAGE AND DISENGAGE	N/A
CENTER CONTACT RETENTION FORCE	45 lbs
RECOMMENDED COUPLING TORQUE	221 to 260in.lbs
COUPLING NUT RETENTION FORCE	>225 lbs
DURABILITY	>500 cycles

ENVIRONMENTAL PARAMETER

TEMPERATURE RANGE	-65 ℃~+165 ℃
THERMAL SHOCK	MIL- STD 202, Meth. 107,Cond. B
VIBRATION	MIL- STD 202, Meth. 204,Cond. B
SHOCK	MIL- STD 202, Meth. 213,Cond. I

* CUSTOMER OUTLINE DRAWING

UNLESS OTHERWISE SPECIFIED:
1) EDGES : C0.15 MAX ;
2) REMOVE ALL BURRS ;
3) SURFACE ROUGHNESS : Ra1.6 ;
4) UNITS : mm ;
5) DIMENSIONS TOLERANCES
DECIMALS : .x ±0.3 .xx ±0.2 .xxx±0.1;
ANGLES : ± 5°.

THIRD ANGLE PROJECTION

APPROVED :	CUSTOMER P/N : -
CHECKED :	SCALE : 1 : 1
DRAWING : JING	DATE : 2020-05-26
	PAGE : 1/1

SLK SUPERLINK

TITLE : 7/16 S/T MALE FOR RG-214 CABLE

DRAWING NO. : 5A7M11S-A06-002

COMPANY WEBSITE : www.slkcorp.com